Knife Gate Valve

Geier International GmbH

www.geierarmaturen.de

TYP

WK/WEK

OPERATING INSTRUCTIONS

GEIER-KNIFE GATE VALVE WK K1/WEK K3

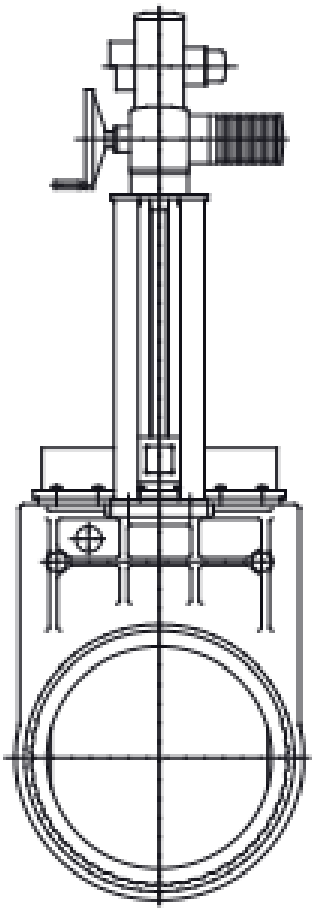

DESCRIPTION OF PRODUCT AND RANGE OF APPLICATION

Type and Design

GEIER-Knife Gate Valve WK K1/WEK K3

DN 700-1400

with non-rising or rising stem
with gearbox and handwheel or with electric actuator

GEIER-Knife Gate Valves are wafer type and end-of-line knife gate valves with the face-to-face dimension K1 or K3.

Nominal size DN	K1 - face-to-face dimension		K3 - face-to-face dimension		Max. admissible working pressure in bars at a working temperature of < 60°C	
	face-to-face dimension mm	Nom.press PN	face-to-face dimension mm	Nom.press PN	K1- face-to-face dimension	K3 - face-to-face dimension
700	165	4	229	10	4	10
800	180	4	241	10	4	10
900	203	2,5	241	6	2,5	6
1000	216	2,5	300	6	2,5	6
1200	254	2,5	350	4	2,5	4
1400	279	1	390	2,5	1	2,5

The Gate Valves were tested for tightness and resistance to DIN EN 12266 and DIN EN 1074 at the manufacturer's plant.

STALLATION INSTRUCTIONS FOR KNIFE GATE VALVES

Owing to the face-to-face dimension, which meets specifications and reduces weight, the knife gate valves are easy to install into the pipelines.

The knife gate valves can be used as in-line wafer type valves or as end-of-line valves.

It is necessary to mind that the two-part valve body is installed into the pipeline free of any tension.

The pipeline must be aligned precisely and the counter flanges must be in perfect alignment to each other. The gap between the flanges must not be larger than the faceto-face dimension of the valves including the seal. In order to bridge slight differences in dimension, extra seals must be used. The pipeline must not be pulled towards the valve by force.

For the installation of the Knife Gate Valves, threaded bolts are used for the drillings of the tapped blind holes in the upper body part. Through-going bolts from flange to flange are used for the installation. Looking at valves with an in-line wafer-type body, the through-going bolts bypass on the side of the valve body; looking at valves with a full flange body, these bolts pass through the through-holes of the valve flanges. It is absolutely necessary to make sure the through-going bolts from pipe flange to pipe flange are tightened firmly, before tightening the bolts into the drillings of the tapped blind holes and in the fastening eye.
Regarding the threaded bolts for the tapped blind holes, the exact bolt length is to be observed, since bolts that are too long damage the valve, respectively the flange connection does not reach leak tightness.

The number and the size of the particular bolts can be learnt from the table in section 9 “flange connection holes“.

The face-to-face dimension of the valves between the pipe flanges is defined in DIN EN558 series 20 and series 16 (formerly DIN3202-3 row K1 and K3).

The lug type knife gate valves can generally be used without counter flange as an endof-line valve. Except for the threaded bolts in the upper part, here all other connections between pipe flange and valve can be effected on one side of the knife gate valve flange by means of threaded bolts and nuts.

Design with mounted electric multi-turn actuator

The electric multi-turn actuator is mounted on the cross bracket of the knife gate valve. The standard type of the multi-turn actuators is equipped with: Torque and travel switches with 1 break and 1 make contact each

- Blinker contact for indication of motor operation
- Heating in the switchgear compartment
- Thermal switch in the motor winding

The knife gate valves are switched in a travel dependent manner in the OPEN end position and torque dependent in CLOSED end position.

The switching points of the torque switches and the travel end switches are set during the factory tightness test at pressure rating in such a way that a running against or jamming at the upper mechanical limit stop of the valve due to motor after-running is avoided. The torque switches act as safety switches, e.g., in intermediate positions.

If the valve is supplied without incorporated electric actuator
, the route switches and torque switches have to be set after mounting the electric actuator.

On this see section "Installation: Resetting of the travel switches".

Please observe the relevant safety rules (VDE / TAB etc.) and the instructions of the electric actuator's manufacturer concerning transport, storage and commissioning.

Electrical connection has to be effected according to Operating Instructions as well as wiring and terminal diagrams of the electric actuator's manufacturer (travel, torque and thermal switches, heating, motor). Before installation, the insulating resistance of the motor must be measured. If it is lower than 500 K-ohms, this shows that the winding is moist. The motor has to be removed in order to be dried up and it must be heated by means of a hot-air fan or in a heating chamber: max. admissible temperature 100°C.

Jogging and Emergency Operation

Attention:

If a foreign body is jammed in when operating the valve, the torque switch for the corresponding direction responds and switches off the motor. The time lag between response of the torque switch and disconnection of the motor from the network depends on the signal delay. If another closing order is given in the original direction, without having moved the valve sufficiently in the opposite direction, the torque will increase. If this procedure is repeated several times, the torque will accumulate. The valve and its operating elements are not designed for such an emergency.

We explicitly draw your attention to the fact that such “jogging operation” is inadmissible.

Jogging operating is admissible under the following conditions:

If the torque switch responds in intermediate position, the valve must first be moved in the opposite direction until the torque switch completely returns to its original position. Only now the valve may be moved again in the direction in which the disturbance occurred. Proceeding this way, you will obtain torques corresponding to the torques set at the torque switch. Moreover, the foreign matter can come off and be flushed out of the seating zone.

Operation by emergency handwheel:
If the valve is operated by means of the handwheel of the electric actuator, the torque switches do not provide any safety function.

If a foreign body is jammed with the valve being in intermediate position, excessive operating force - particularly in case of high gear reduction - might be damaging to the drive components. Therefore:

If any resistance is detected during emergency handwheel operation, some turns must be made in the opposite direction before the handwheel is turned again in the direction in which the disturbance occurred (flush out the foreign body). Continue operation with utmost care, in no case using excessive force. If need be, repeat flushing operation.

Commissioning with Electric Actuator

- Turn the valve manually to intermediate position.
- Check the gate movement and thus the direction of rotation of the actuator by brief electrical starting.

Valve is closing = CLOCKWISE direction of actuator rotation
Valve is opening = ANTI-CLOCKWISE direction of actuator rotation

- In case of wrong direction of rotation, change poles of motor connection
- Check direction of rotation by brief electrical starting
- Check correct switching sequence of the torque switches in "OPENCLOSE" direction by manual operation
- Change poles if necessary
- Move the valve over the whole travel only if the direction of rotation for closing the valve is CLOCKWISE.

In case of wrong direction of rotation, travel and torque switches are ineffective!

Resetting the travel switches

- Move the valve manually into "OPEN" end position
- Turn back by one turn of the stem
- Adjust the "OPEN" travel switch according to the Operating Instructions of the electric actuator's manufacturer
- Move the valve manually into "Closed" end position
- Adjust the "CLOSED" torque switch according to the Operating Instructions of the electric actuator's manufacturer

If these measures proposed by us are not observed, we cannot be made liable for any damages resulting thereof.

OPERATION AND APPLICATION

For inspection or maintenance work, the valve - or parts of it - must only be dismantled if the pipe section in which it is installed has been isolated and made pressureless. If work is carried out in the vicinity of the valves, leading to dirt accumulation (concrete work, masonry, painting, sandblasting, etc.), the valves have to be covered effectively.

If the GEIER-Knife Gate Valves are equipped with EPDM seals, the EPDM parts must not come into contact with oil or grease since EPDM swells.

The GEIER-Knife Gate Valves of this type are suitable for “OPEN-CLOSED” service.
Extending the operating elements, for example by levers or similar items, is not allowed, danger of damage!

STORAGE

GEIER-Knife Gate Valves are to be stored standing upright and in closed position. Avoid long-time outdoor storage. At least, the gate valves then have to be covered against direct influences of the weather (e.g. by tarpaulin). Rubber-coated components, as e.g. the sealing ring, have to be protected against direct solar radiation. Avoid the effects of radiant heat, e.g. from heaters.

MAINTENANCE INSTRUCTIONS FOR KNIFE GATE VALVES

As to tightness and cleaning, the Knife Gate Valves of the type series TG04 are Gate Valves that have been designed maintenance-free.

The gate must be kept clean, the lateral edges must be slightly greased, so that a smooth-running operation is ensured. Please store and handle the valves with care prior to installation.

The operating stem of the valves needs to be greased regularly using the grease nipple. The stem must be greased properly.

Check regularly whether the piston rod of pneumatic and hydraulic valves is clean, as contamination may damage the piston rod seals. Seals for piston and piston rod are wear parts and must be exchanged occasionally, depending on the switching frequency.
The respective Operating and Maintenance Instructions are to be observed for pneumatic cylinders, hydraulic cylinders and electric actuators.

For valves, which remain in one position over a longer period (open or closed), occasional operation is advisable, in order to prevent incrustations on the gate, hardening of the medium or stiffness caused by corrosion.

To avoid premature wear of the threaded bushes, the valve stem has to be lubricated regularly with the appropriate grease (e.g., K2 according to DIN 51825).

In case leakage appears in closed position or towards the outside after long running time or due to particular circumstances, the following details must be observed:

Leakage towards the outside The valves are designed maintenance-free towards the outside. In case of a leakage towards the outside at the gate guide, which cannot be repaired by adjustment of the pressure plate, the sealing element must be exchanged. For this purpose, the pressure plate has to be lifted while the valve is open. Thereafter, the sealing element is easily accessible for exchange. The use of original exchange seals is recommended.

Leakage in closed position In order to exchange the flow seal, the two-piece valve body, consisting of a front and a back piece, needs to be taken apart. Thereafter, the seal, which is situated in the groove of the back of the body, can be exchanged. The use of original exchange seals is recommended.

We draw your attention to the fact that, due to special allowance and quality requirements, perfect reliability of the valve is only ensured when using the spare seals we provide.

MAINTENANCE FOR KNIFE GATE VALVES AFTER LONG PERIODS OF STANDSTILL

In case of a long standstill period prior to installation or putting into operation, it is absolutely necessary to provide the following maintenance work for the valves:

Maintenance prior to commissioning

Remove installation safety device

Valves with handwheel and electric actuator: Clean and regrease gate when valve is open.

Valves with handwheel: Additionally, the stem has to be cleaned and regreased, grease cross bracket.

Valves with hydraulic actuator and pneumatic actuator: Clean piston rod. Clean and regrease gate when valve is open.

Maintenance during commissioning

Visual check for possible leakage at the gate seal towards the outside. Allow the applied water pressure to react for some time, in order to moisten dry gland seals. In case of further leakage, retighten the pressure plate evenly.

REPAIRING INSTRUCTIONS FOR KNIFE GATE VALVES

As to tightness and cleaning, the Knife Gate Valves of the type series TG04 are Gate Valves that have been designed maintenance-free.

In case leakage appears in closed position/in the flow passage way or towards the outside after long running time or due to particular circumstances, or in case the gate has been damaged by various external influences, the following details must be observed:

The actions described below, must only be carried out when the valve is nonpressurised and drained.

a. Leakage towards the outside
The valves are designed maintenance-free towards the outside. In case of a leakage towards the outside at the gate guide, which cannot be repaired by adjustment of the pressure plate, the sealing element must be exchanged. For this purpose, the pressure plate has to be lifted while the valve is open. Thereafter, the sealing element is easily accessible for exchange. The use of original exchange seals is recommended.

b. Leakage in closed position
In order to exchange the flow seal, the two-piece valve body, consisting of a front and a back piece, needs to be taken apart. For this the mounting and pressure plate need to be disassembled first. Thereafter, the seal, which is situated in the groove of the back of the body, can be exchanged. Gland seal and o-ring need to be exchanged likewise. In order to ensure reliability, the use of original exchange seals is recommended.

Prior to assembly, the seal faces of the body halves need to be cleaned from residues. The faces must be coated evenly and thinly with a sealing compound. Seal and gate are inserted. The body halves are connected with screws. The gland seal and o-ring are inserted. The pressure plate and mounting are assembled. In order to avoid damages, appropriate tools must be used. All screw connections need to be tightened manually.

c. Exchange of the gate
Procedure described as under b.

We draw your attention to the fact that, due to special allowance and quality requirements, perfect reliability of the valve is only ensured when using the spare seals we provide.

Worker's protection
Particularly during disassembly but also during assembly, you need to pay attention to loose and falling valve parts. Worker's protection The necessary measures, e.g. the use of personal protective equipment and appropriate tools, must be observed. Depending on the flow medium, specific safety measures are required.

PARTS LIST FOR KNIFE GATE VALVES

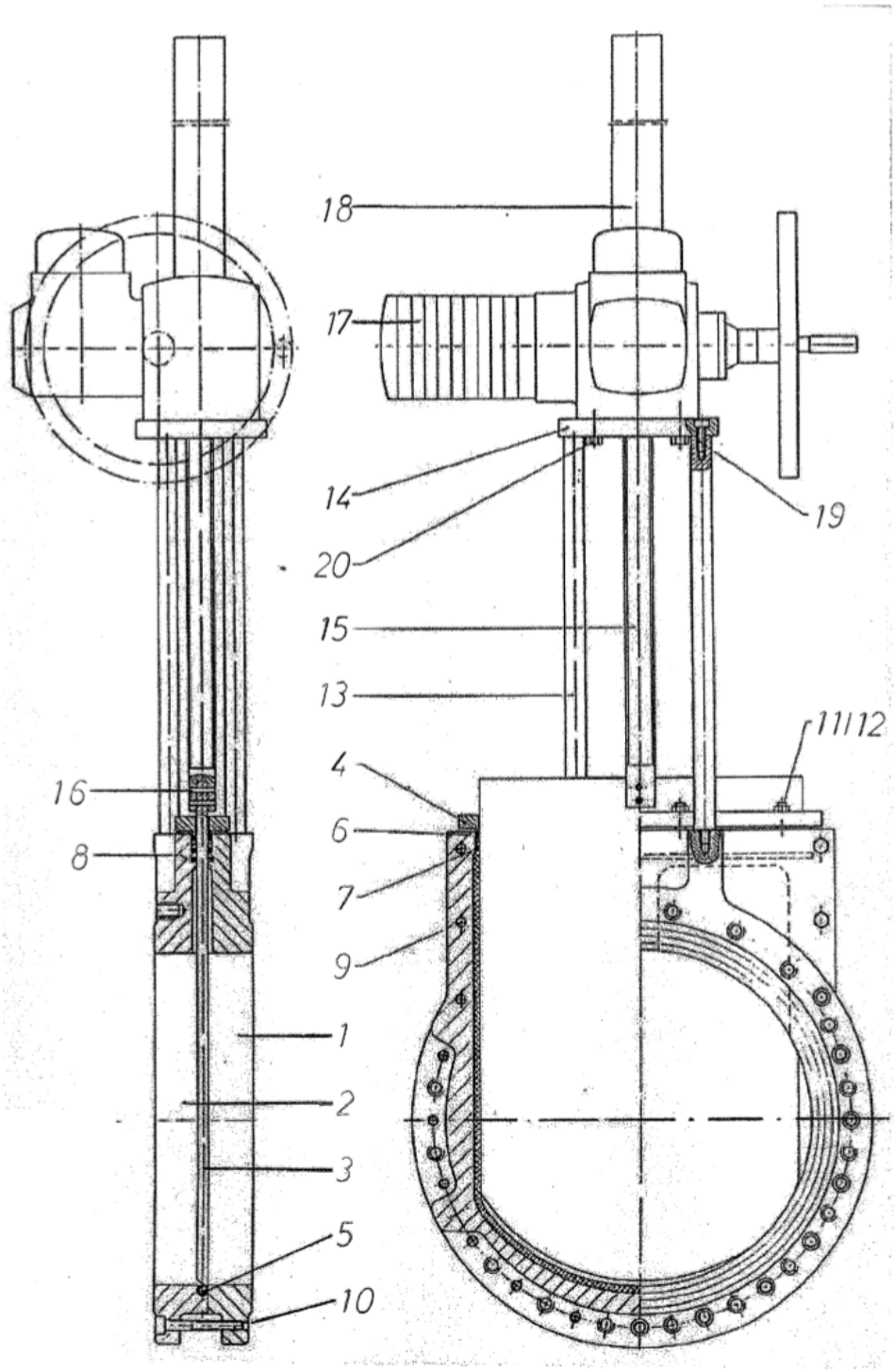

Parts list

1. Front body component
2. Back body component
3. Gate
4. Pressure plate
5. Flow seal
6. O-ring
7. PTFE packing
8. Brass scraper
9. Hexagon bolt
10. Cylindrical screw
11. Gudgeon
12. Hexagon nut
13. Column
14. Cylindrical screw
15. Stem
16. Set pin
17. Electric actuator
18. Protective tube
19. Cross bracket
20. Hexagon bolt

POS/PART	BENNENUNG / DESCRIBTION	STÜCK / QTY.
1	GEHÄUSEVORDERTEIL / BODY DRONTPART	1
2	GEHÄUSERÜCKTEIL / BODY REARPART	1
3	SCHIEBERPLATTE / GATE	1
4	STOPFBUCHSBRILLE / GLAND	1
5	RUNDSCHNUR / ROUND CORD	1
6	RUNDSCHNURRING / ROUND CORD RING	1
7	PACKUNG / PACKING	1
8	SÄULE / COLUMN	4
9	TRAVERSE	1
10	SPINDEL / STEM	1
11	E-ANTRIEB / EL. ACTUATOR	1

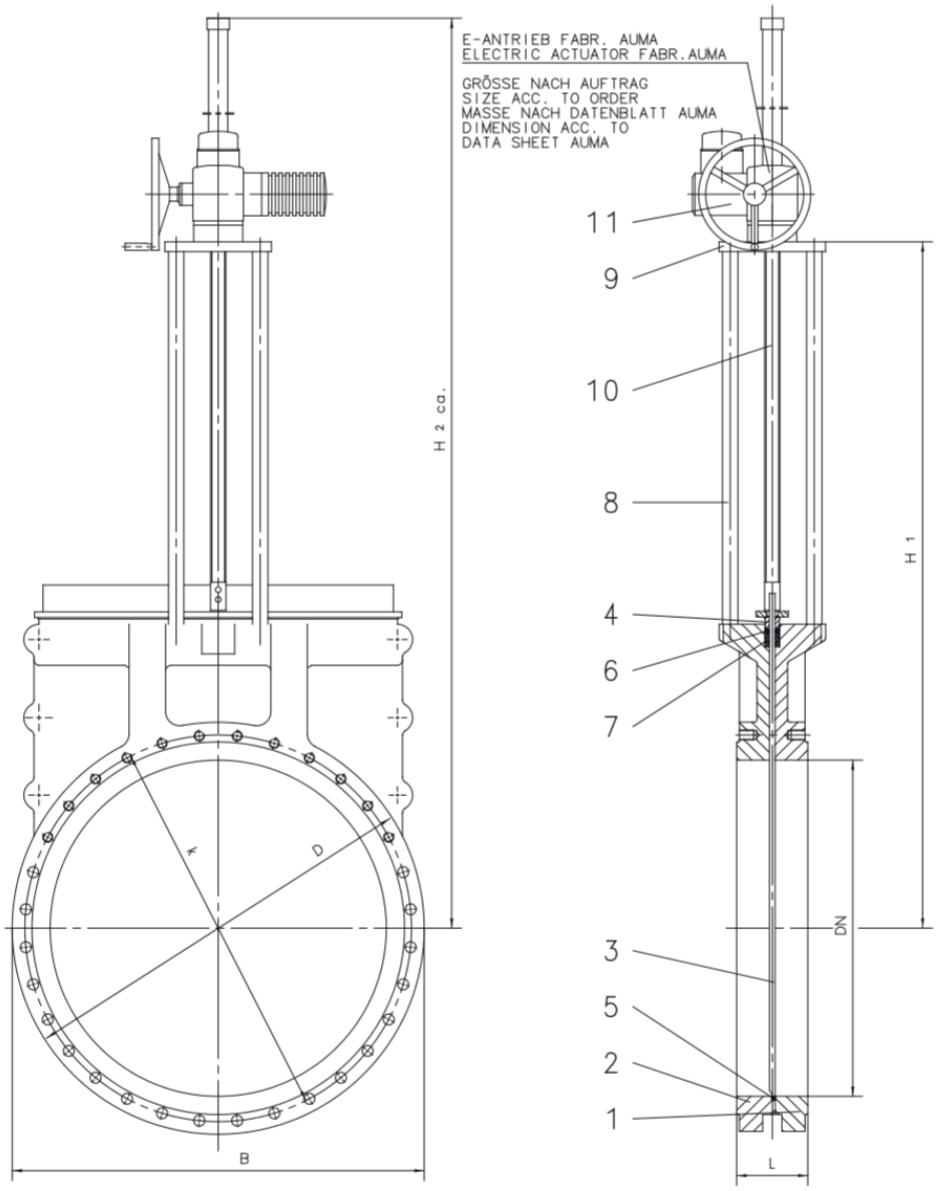

DN	PN	L	B	D	H1	H2	k
700	4	165	895	895	1485	2363	840
800	4	190	1015	1015	1650	2628	950
900	3	203	1115	1115	1840	2973	1050
1000	2	216	1230	1230	2000	3243	1160
1200	2	254	1480	1480	2390	3823	1380
1400	1	279	1675	1675	2850	4558	1590

POS/PART	BENNENUNG / DESCRIBTION	STÜCK / QTY.
1	GEHÄUSEVORDERTEIL / BODY FRONTPART	1
2	GEHÄUSERÜCKTEIL / BODY REARPART	1
3	SCHIEBERPLATTE / GATE	1
4	STOPFBUCHSBRILLE / GLAND	1
5	RUNDSCHNUR / ROUND CORD	1
6	RUNDSCHNURRING / ROUND CORD RING	1
7	PACKUNG / PACKING	1
8	SÄULE / COLUMN	4
9	TRAVERSE	1
10	SPINDEL / STEM	1
11	KEGELRADGETRIEBE GK-.. / BEVEL GEARBOX GK-..	1
12	SECHSKANTSCHRAUBE / HEXAGON SCREW	
13	SECHSKANTSCHRAUBE / HEXAGON SCREW	

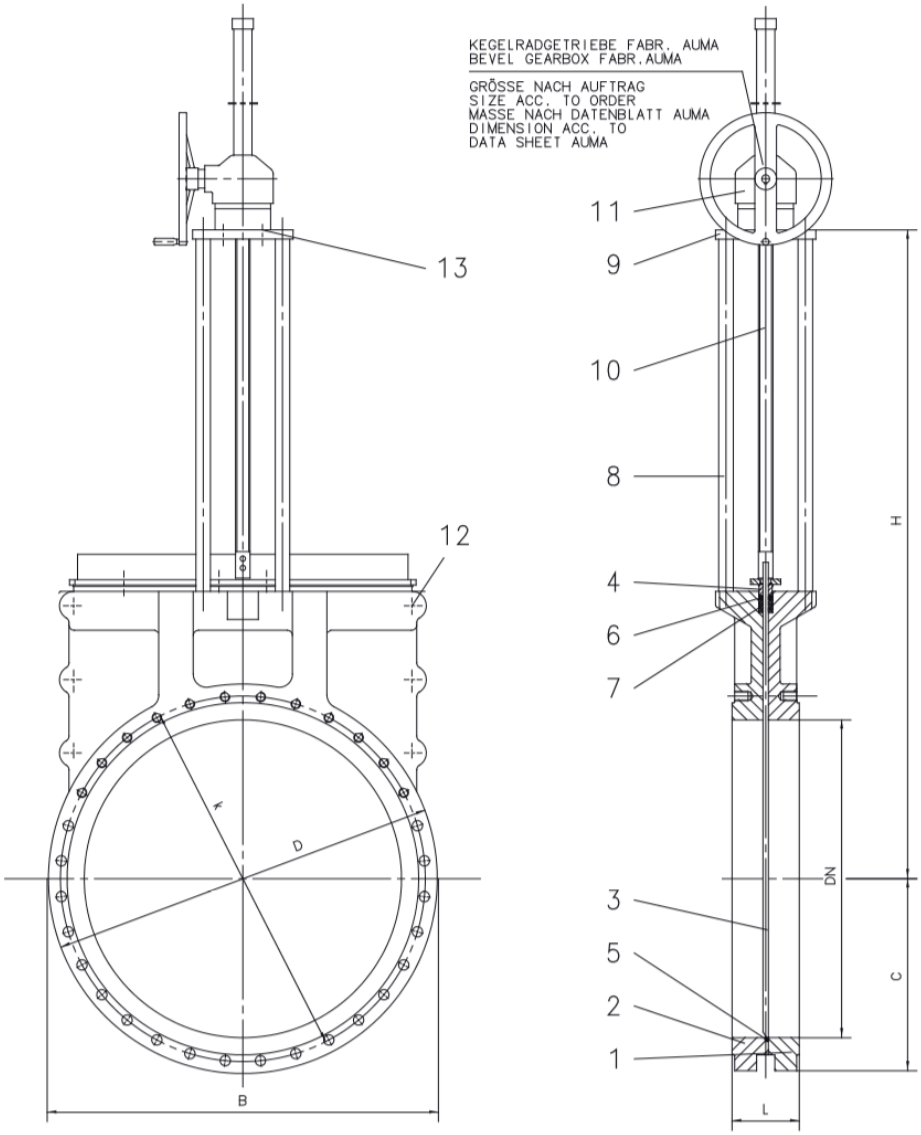

DN	PN	L	B	C	D	H	k
700	4	165	895	450	895	1485	840
800	4	190	1015	510	1015	1650	950
900	3	203	1115	560	1115	1840	1050
1000	2	216	1230	615	1230	2000	1160
1200	2	254	1480	725	1480	2390	1380
1400	1	279	1675	840	1675	2850	1590

POS/PART	BENNENUNG / DESCRIBTION	STÜCK / QTY.
1	GEHÄUSEVORDERTEIL / BODY FRONTPART	1
2	GEHÄUSERÜCKTEIL / BODY REARPART	1
3	SCHIEBERPLATTE / GATE	1
4	STOPFBUCHSBRILLE / GLAND	1
5	RUNDSCHNUR / ROUND CORD	1
6	RUNDSCHNURRING / ROUND CORD RING	1
7	PACKUNG / PACKING	1
8	SÄULE / COLUMN	4
9	TRAVERSE	1
10	SPINDEL / STEM	1
11	STIRNRADGETRIEBE GST-.. / SPUR GEARBOX GST-..	1
12	SECHSKANTSCHRAUBE / HEXAGON SCREW	
13	SECHSKANTSCHRAUBE / HEXAGON SCREW	

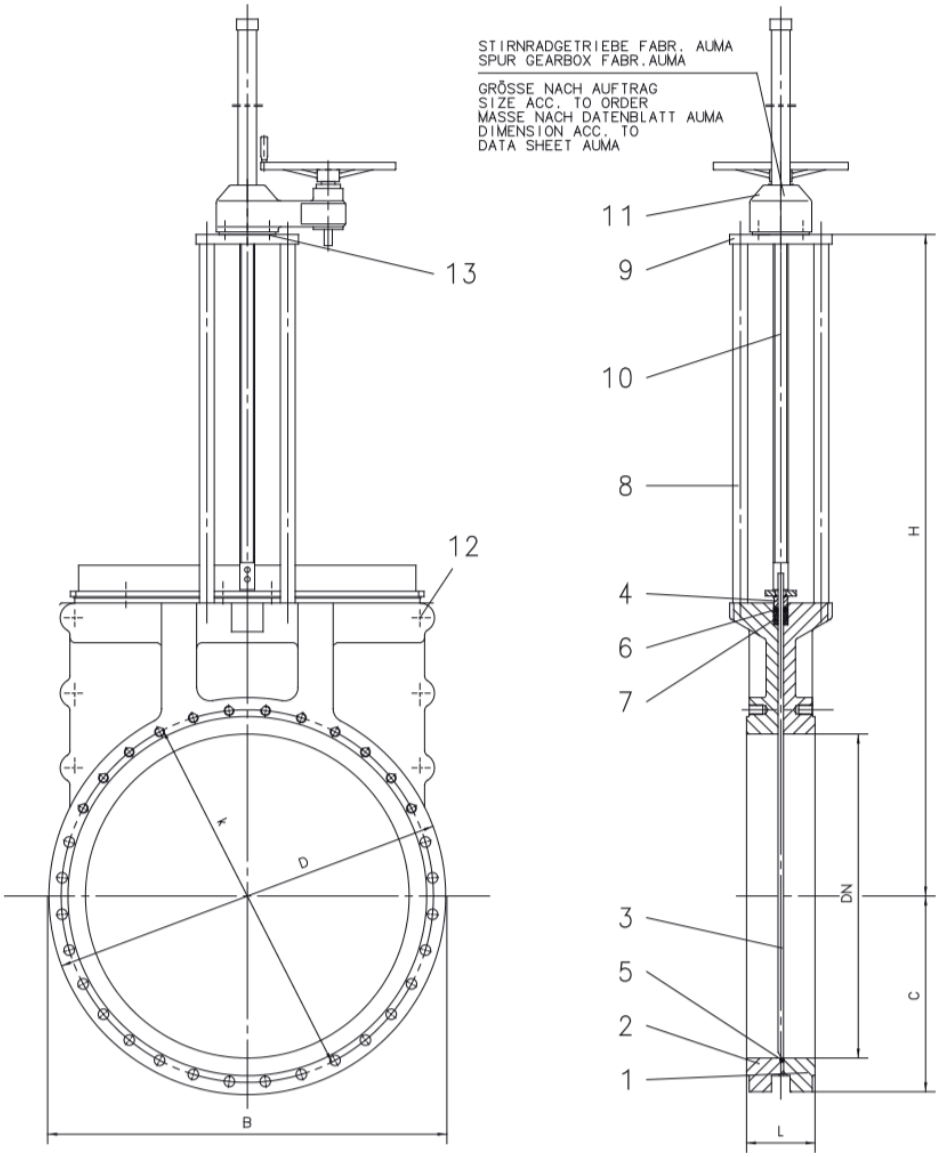

DN	PN	L	B	C	D	H	k
700	4	165	895	450	895	1485	840
800	4	190	1015	510	1015	1650	950
900	3	203	1115	560	1115	1840	1050
1000	2	216	1230	615	1230	2000	1160
1200	2	254	1480	725	1480	2390	1380
1400	1	279	1675	840	1675	2850	1590

POS/PART	BENNENUNG / DESCRIBTION	STÜCK / QTY.
1	GEHÄUSEVORDERTEIL / BODY FRONTPART	1
2	GEHÄUSERÜCKTEIL / BODY REARPART	1
3	SCHIEBERPLATTE / GATE	1
4	STOPFBUCHSBRILLE / GLAND	1
5	RUNDSCHNUR / ROUND CORD	1
6	RUNDSCHNURRING / ROUND CORD RING	1
7	PACKUNG / PACKING	1
8	SÄULE / COLUMN	4
9	TRAVERSE	1
10	SPINDEL / STEM	1
11	E-ANTRIEB / EL. ACTUATOR	1
12	SECHSKANTSCHRAUBE / HEXAGON SCREW	
13	SECHSKANTSCHRAUBE / HEXAGON SCREW	

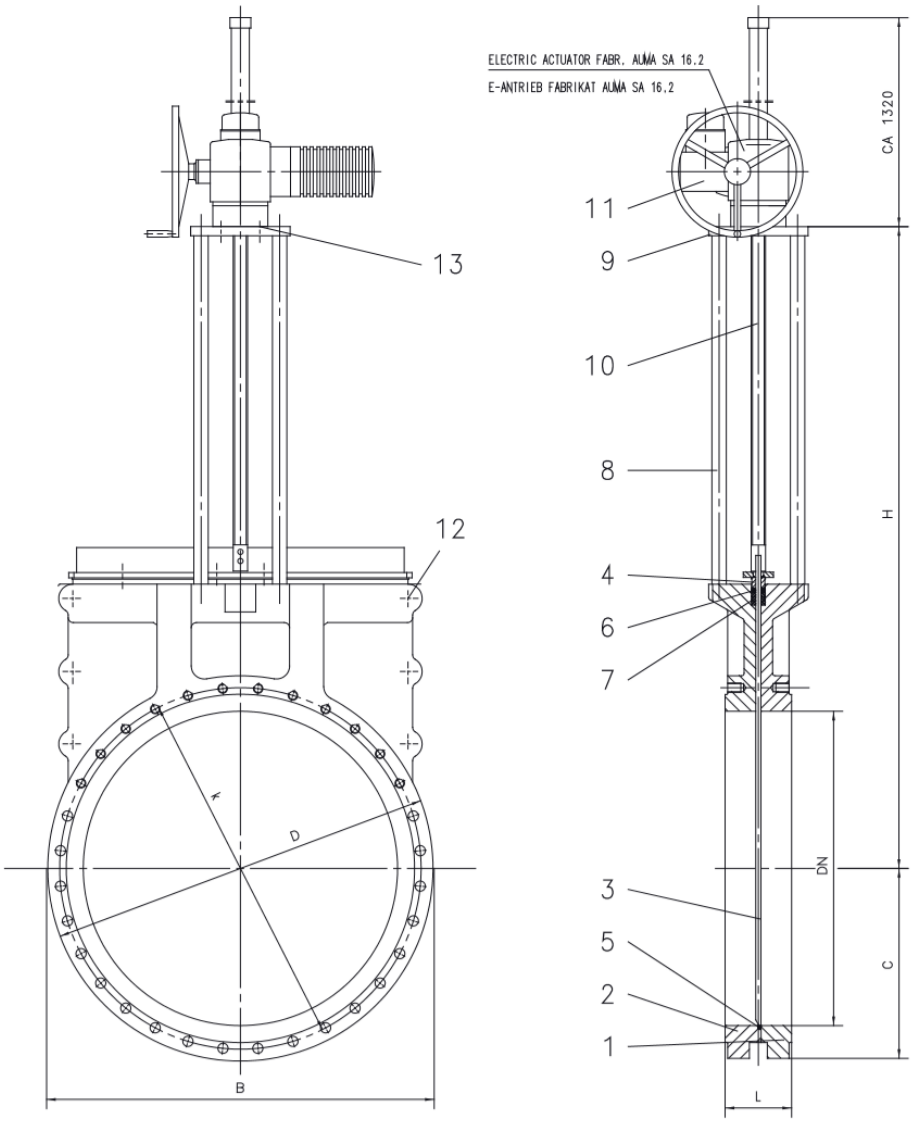

DN	PN	L	B	D	H1	H2	k
700	10	229	895	895	1485	2363	840
800	10	241	1015	1015	1650	2628	950
900	6	241	1115	1115	1840	2973	1050
1000	6	300	1230	1230	2000	3243	1160
1200	4	350	1480	1480	2390	3823	1380
1400	2,5	390	1675	1675	2850	4558	1590

POS/PART	BENNENUNG / DESCRIBTION	STÜCK / QTY.
1	GEHÄUSEVORDERTEIL / BODY FRONTPART	1
2	GEHÄUSERÜCKTEIL / BODY REARPART	1
3	SCHIEBERPLATTE / GATE	1
4	STOPFBUCHSBRILLE / GLAND	1
5	RUNDSCHNUR / ROUND CORD	1
6	RUNDSCHNURRING / ROUND CORD RING	1
7	PACKUNG / PACKING	1
8	SÄULE / COLUMN	4
9	TRAVERSE	1
10	SPINDEL / STEM	1
11	KEGELRADGETRIEBE GK-.. / BEVEL GEARBOX GK-..	1
12	SECHSKANTSCHRAUBE / HEXAGON SCREW	
13	SECHSKANTSCHRAUBE / HEXAGON SCREW	

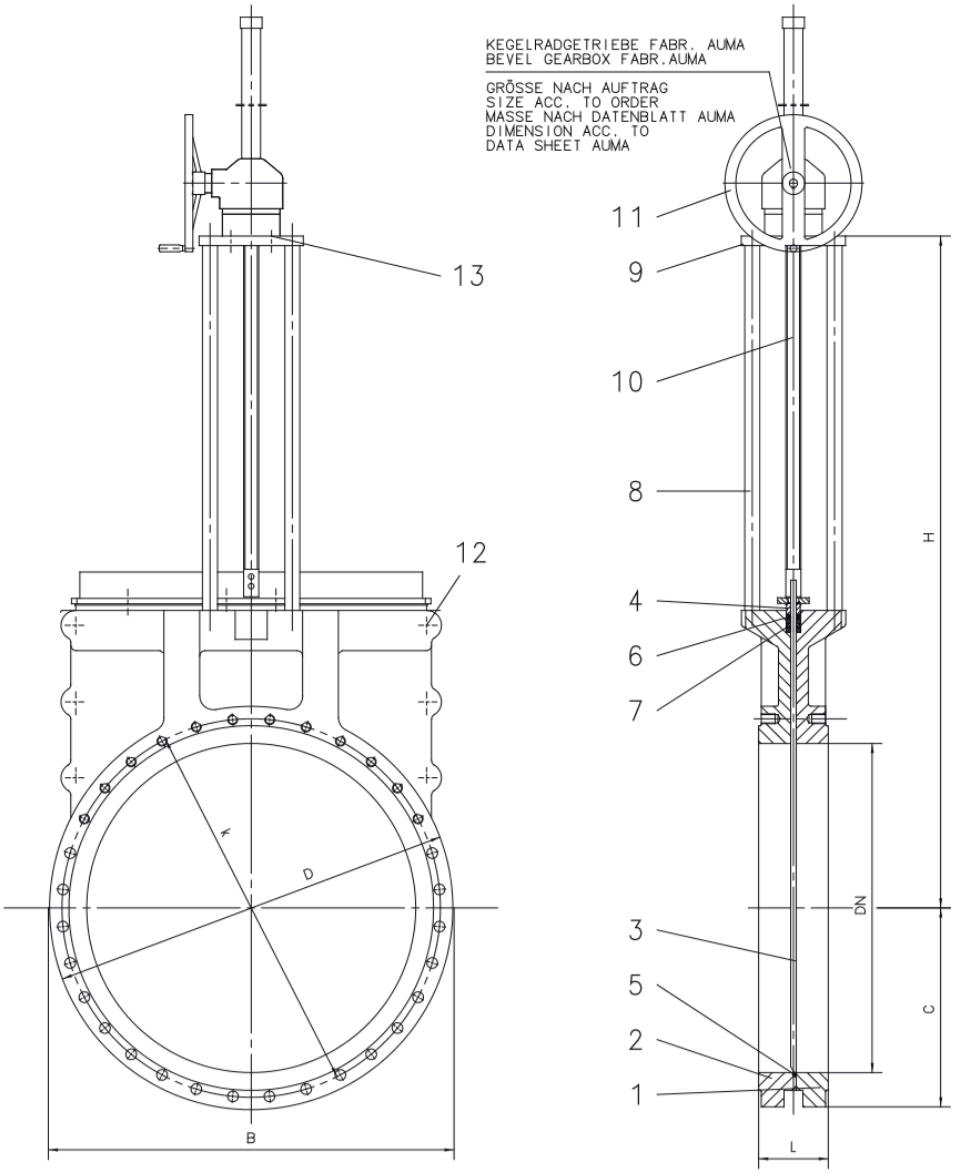

DN	PN	L	B	D	H1	H2	k
700	10	229	895	895	1485	2363	840
800	10	241	1015	1015	1650	2628	950
900	6	241	1115	1115	1840	2973	1050
1000	6	300	1230	1230	2000	3243	1160
1200	4	350	1480	1480	2390	3823	1380
1400	2,5	390	1675	1675	2850	4558	1590

POS/PART	BENNENUNG / DESCRIBTION	STÜCK / QTY.
1	GEHÄUSEVORDERTEIL / BODY FRONTPART	1
2	GEHÄUSERÜCKTEIL / BODY REARPART	1
3	SCHIEBERPLATTE / GATE	1
4	STOPFBUCHSBRILLE / GLAND	1
5	RUNDSCHNUR / ROUND CORD	1
6	RUNDSCHNURRING / ROUND CORD RING	1
7	PACKUNG / PACKING	1
8	SÄULE / COLUMN	4
9	TRAVERSE	1
10	SPINDEL / STEM	1
11	STRINRAFGETRIEBE GST-.. / SPUR GEARBOX GST-..	1
12	SECHSKANTSCHRAUBE / HEXAGON SCREW	
13	SECHSKANTSCHRAUBE / HEXAGON SCREW	

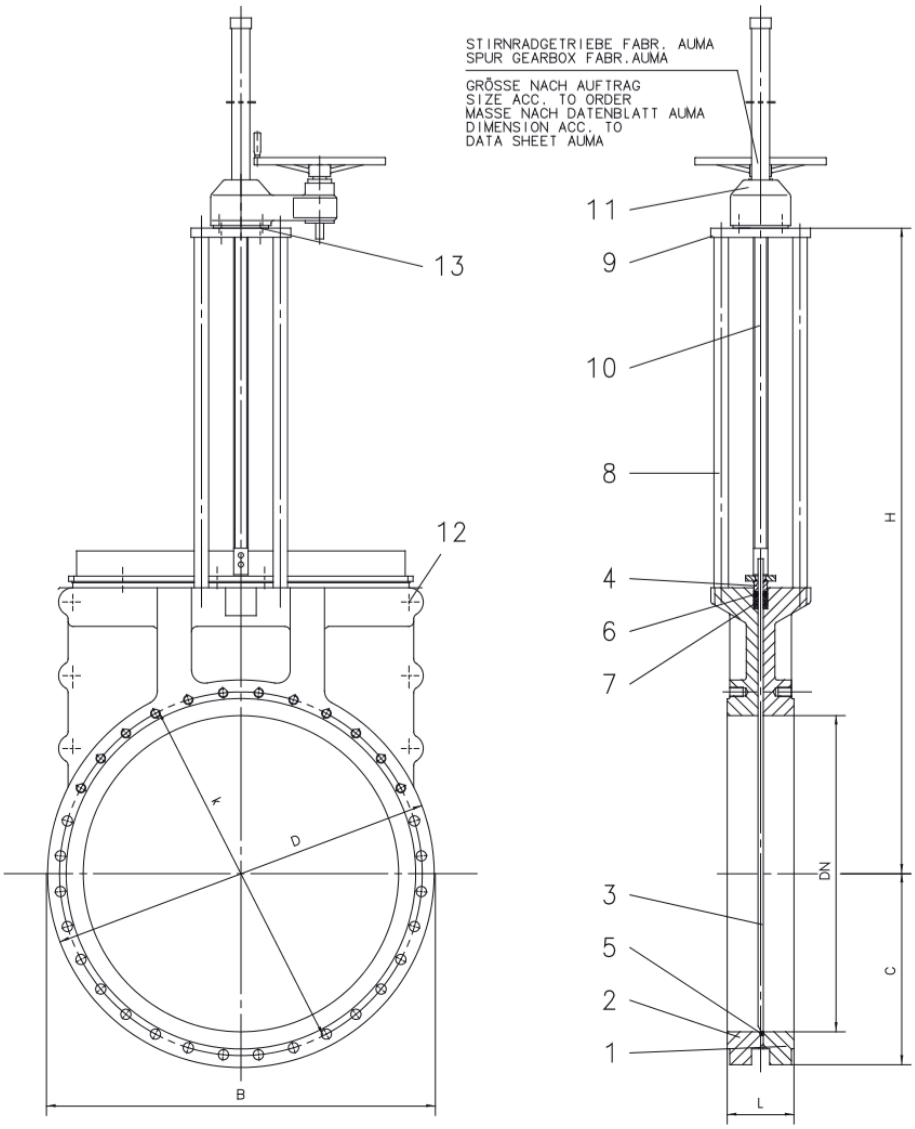

DN	PN	L	B	D	H1	H2	k
700	10	229	895	895	1485	2363	840
800	10	241	1015	1015	1650	2628	950
900	6	241	1115	1115	1840	2973	1050
1000	6	300	1230	1230	2000	3243	1160
1200	4	350	1480	1480	2390	3823	1380
1400	2,5	390	1675	1675	2850	4558	1590

FLANGE CONNECTION HOLES

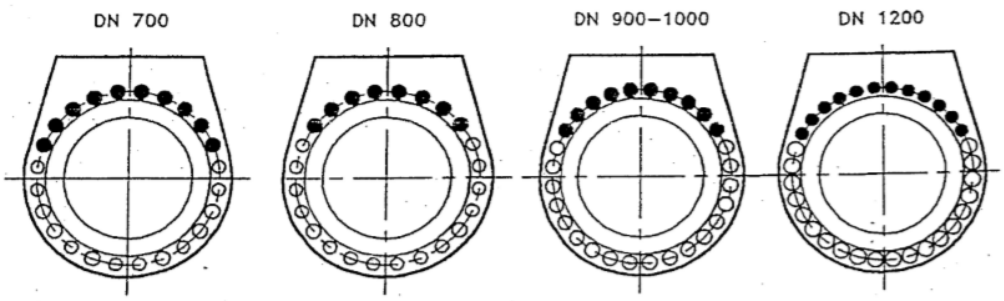

- • Threaded blind holes
- ◯ Through-going hole

Flange connecting dimensions					
DN	•	o	d	**t** for K1-Face-to-face dimension	**t** for K3-Face-to-face dimension
700	10	14	M27	33	35
800	8	16	M30	40	38
900	10	18	M30	40	40
1000	10	18	M33	45	50
1200	12	20	M36	45	55
1400	14	22	M39	55	58